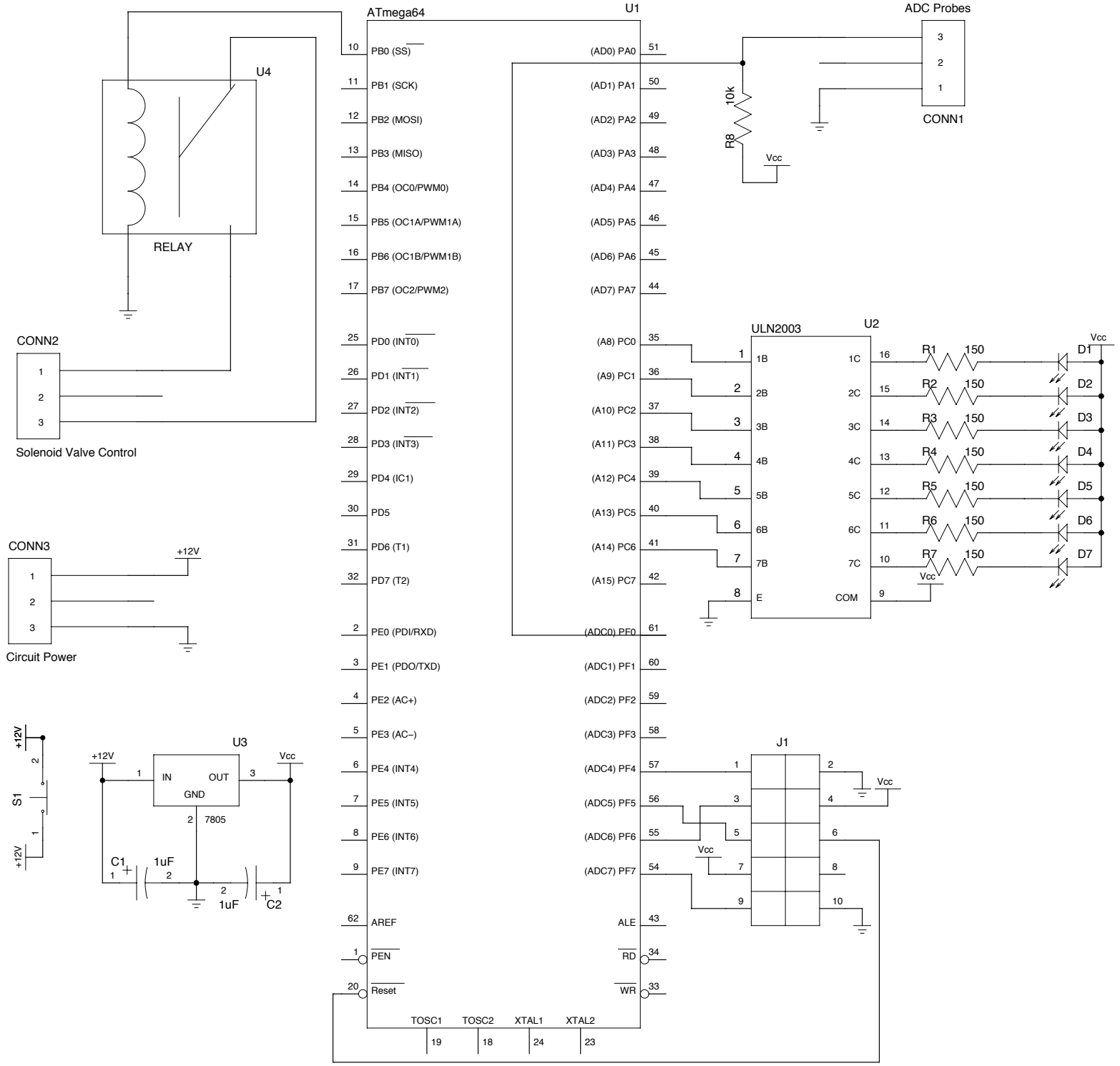
ATmega64
U1
ADC Probes
CONN1
U4
RELAY
CONN2
Solenoid Valve Control
CONN3
Circuit Power
+12V
U3
IN
OUT
GND
7805
C1
1uF
C2
S1
Vcc
R8
10k
ULN2003
U2
COM
R1
R2
R3
R4
R5
R6
R7
150
D1
D2
D3
D4
D5
D6
D7
J1
PB0 (SS)
PB1 (SCK)
PB2 (MOSI)
PB3 (MISO)
PB4 (OC0/PWM0)
PB5 (OC1A/PWM1A)
PB6 (OC1B/PWM1B)
PB7 (OC2/PWM2)
PD0 (INT0)
PD1 (INT1)
PD2 (INT2)
PD3 (INT3)
PD4 (IC1)
PD5
PD6 (T1)
PD7 (T2)
PE0 (PDI/RXD)
PE1 (PDO/TXD)
PE2 (AC+)
PE3 (AC−)
PE4 (INT4)
PE5 (INT5)
PE6 (INT6)
PE7 (INT7)
AREF
PEN
Reset
(AD0) PA0
(AD1) PA1
(AD2) PA2
(AD3) PA3
(AD4) PA4
(AD5) PA5
(AD6) PA6
(AD7) PA7
(A8) PC0
(A9) PC1
(A10) PC2
(A11) PC3
(A12) PC4
(A13) PC5
(A14) PC6
(A15) PC7
(ADC0) PF0
(ADC1) PF1
(ADC2) PF2
(ADC3) PF3
(ADC4) PF4
(ADC5) PF5
(ADC6) PF6
(ADC7) PF7
ALE
RD
WR
TOSC1
TOSC2
XTAL1
XTAL2