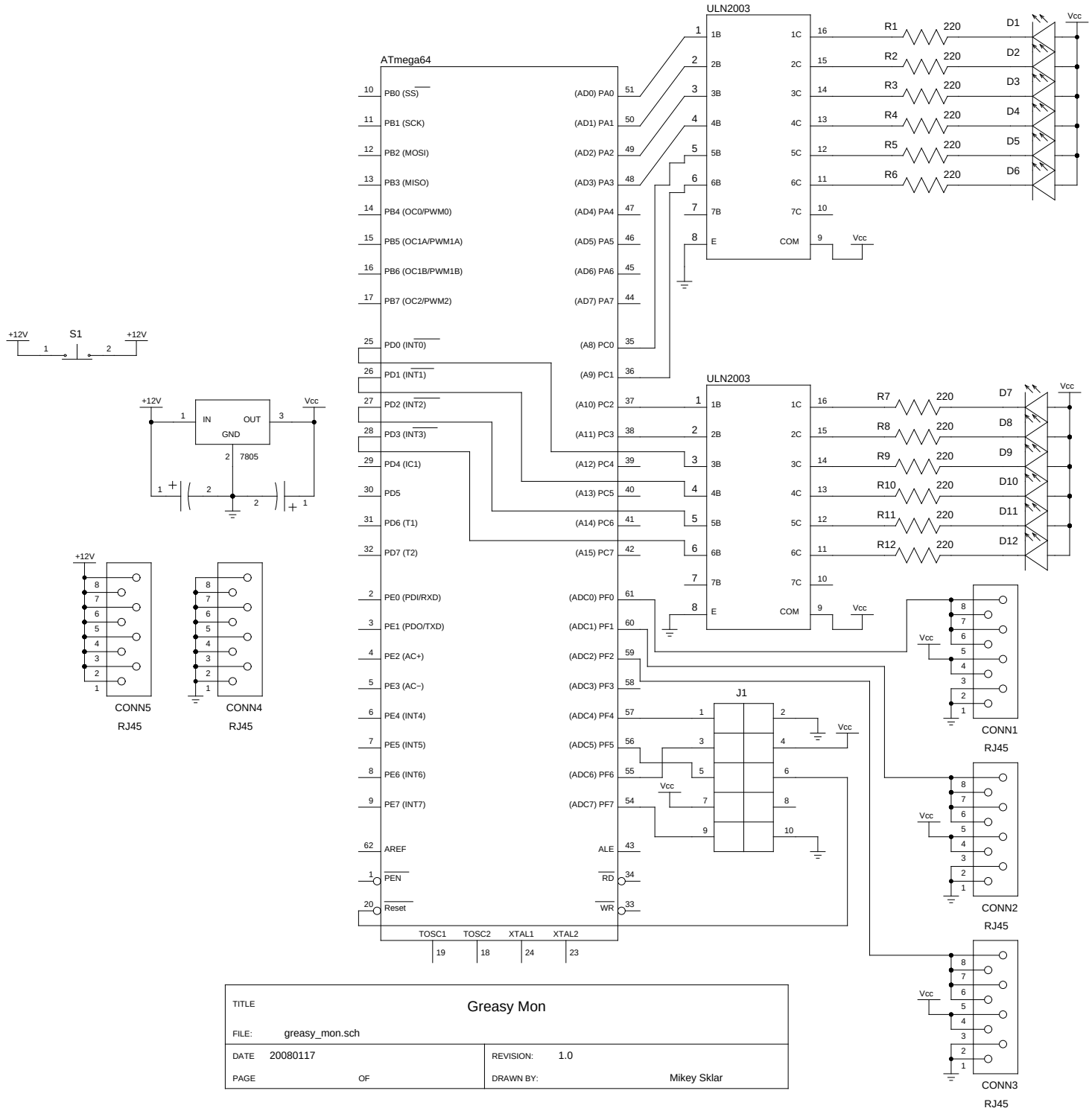

TITLE	Greasy Mon		
FILE:	greasy_mon.sch		
DATE	20080117	REVISION:	1.0
PAGE	OF	DRAWN BY:	Mikey Sklar